Stainless Steel Thimble

Product information

Pressed of profile steel. The first choice for harsh environment of the marine sector.

Material: Stainless acidproof steel AISI 316.
Finish: Polished

Part Code	Rope Ø range mm	A mm	B mm	L mm	S mm	Weight kg/100pc	Delivery time
123100300190	3	4	10	17	1,0	0.3	7
123100500190	5	6	13	21	1,2	0.7	3
123100600190	6	7	15	27	1,5	1.1	3
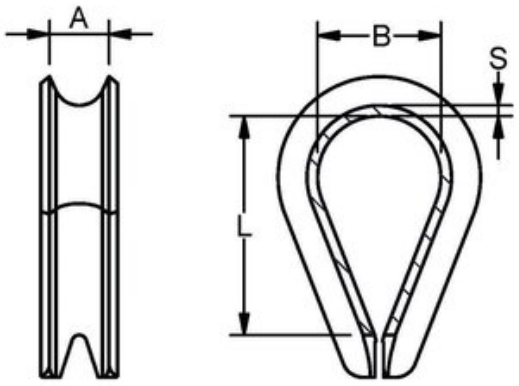
Blueprint